STEP 1

PANELS ARE BOLTED
TOGETHER
USING 4NO. M10X20
CARRIAGE BOLTS
AND HEX NUTS (SUPPLIED)

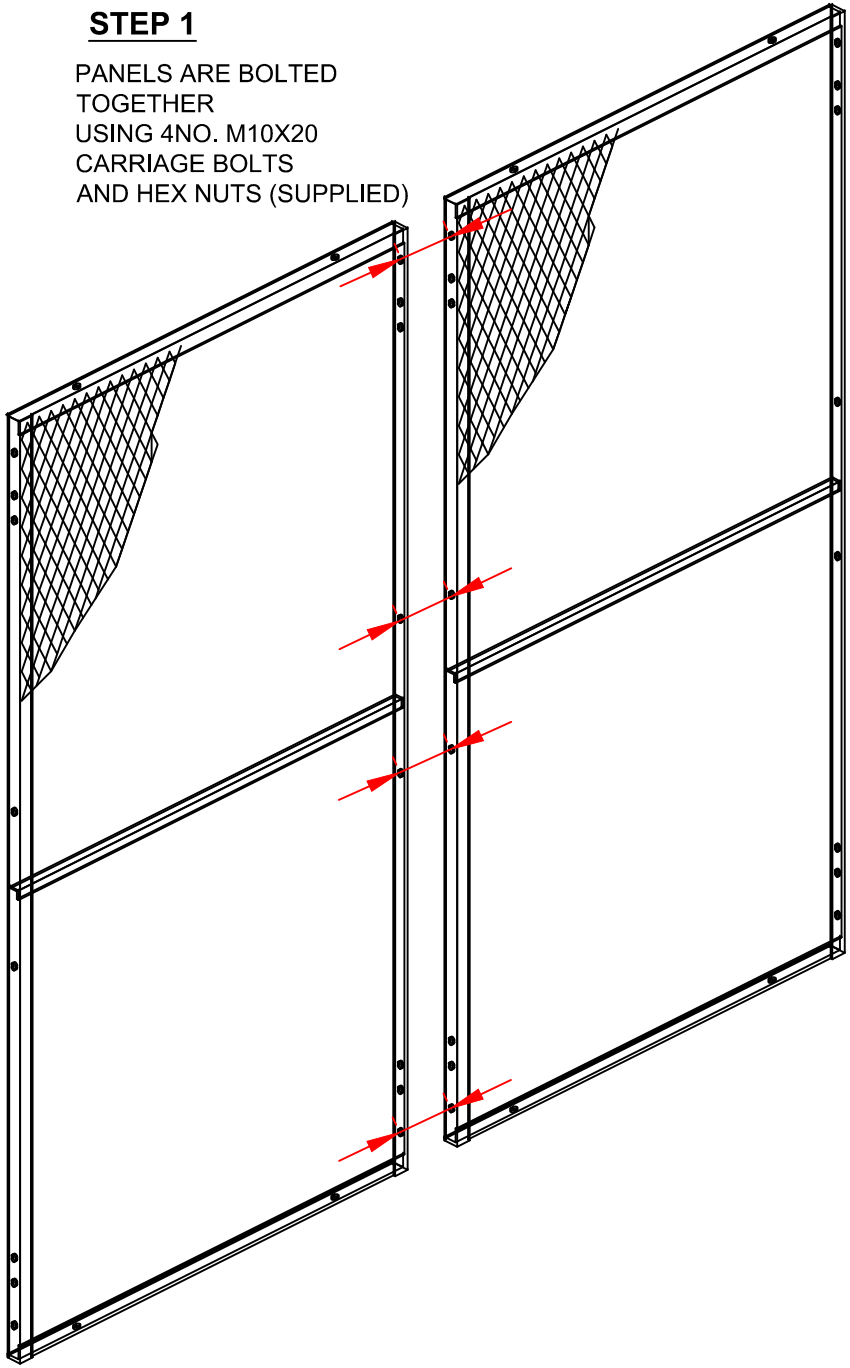

STEP 2

ONCE PANELS ARE BOLTED TOGETHER, SECURE TO THE GROUND WITH M10X77 ANCHOR BOLTS (SUPPLIED)

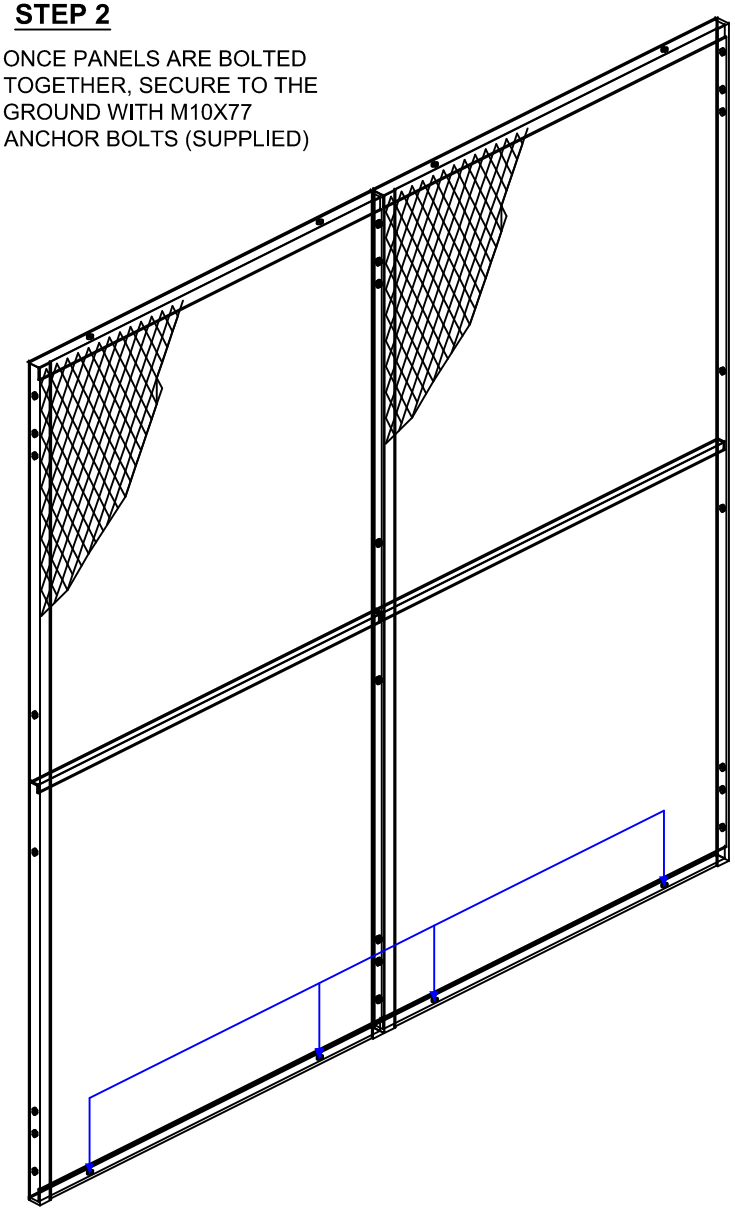

STEP 3

CORNERS ARE ATTACHED
WITH CORNER CLEATS
(OUTSIDE) AND M10X20
CARRIAGE BOLTS

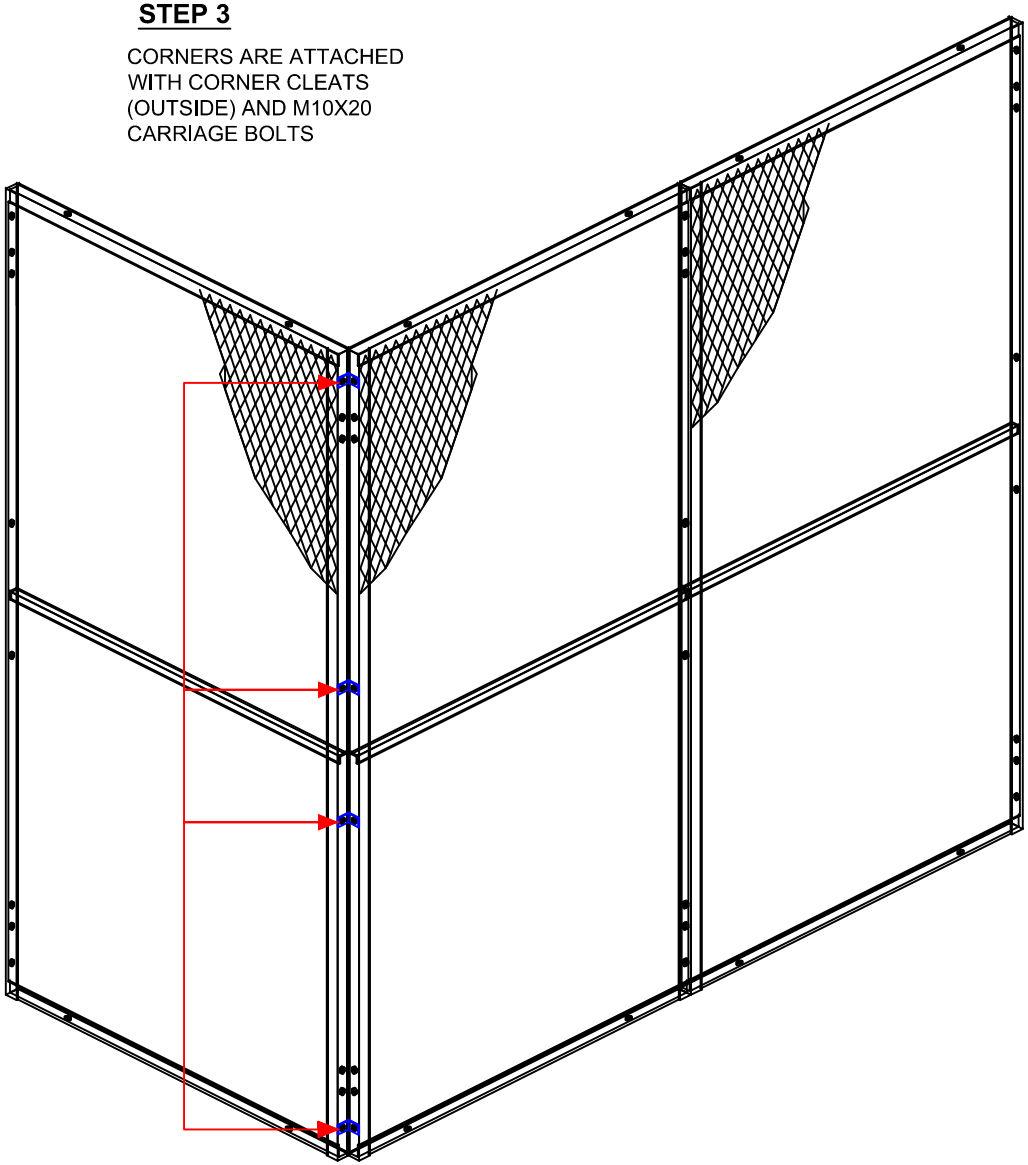

STEP 4

ATTACH THE ROOF PANELS. ROOF PANELS ARE THE SAME AS SIDE PANELS. BOLT TOGETHER WITH M10X20 CARRIAGE BOLTS AND USE CORNER CLEATS TO ATTACH TO THE SIDE PANELS

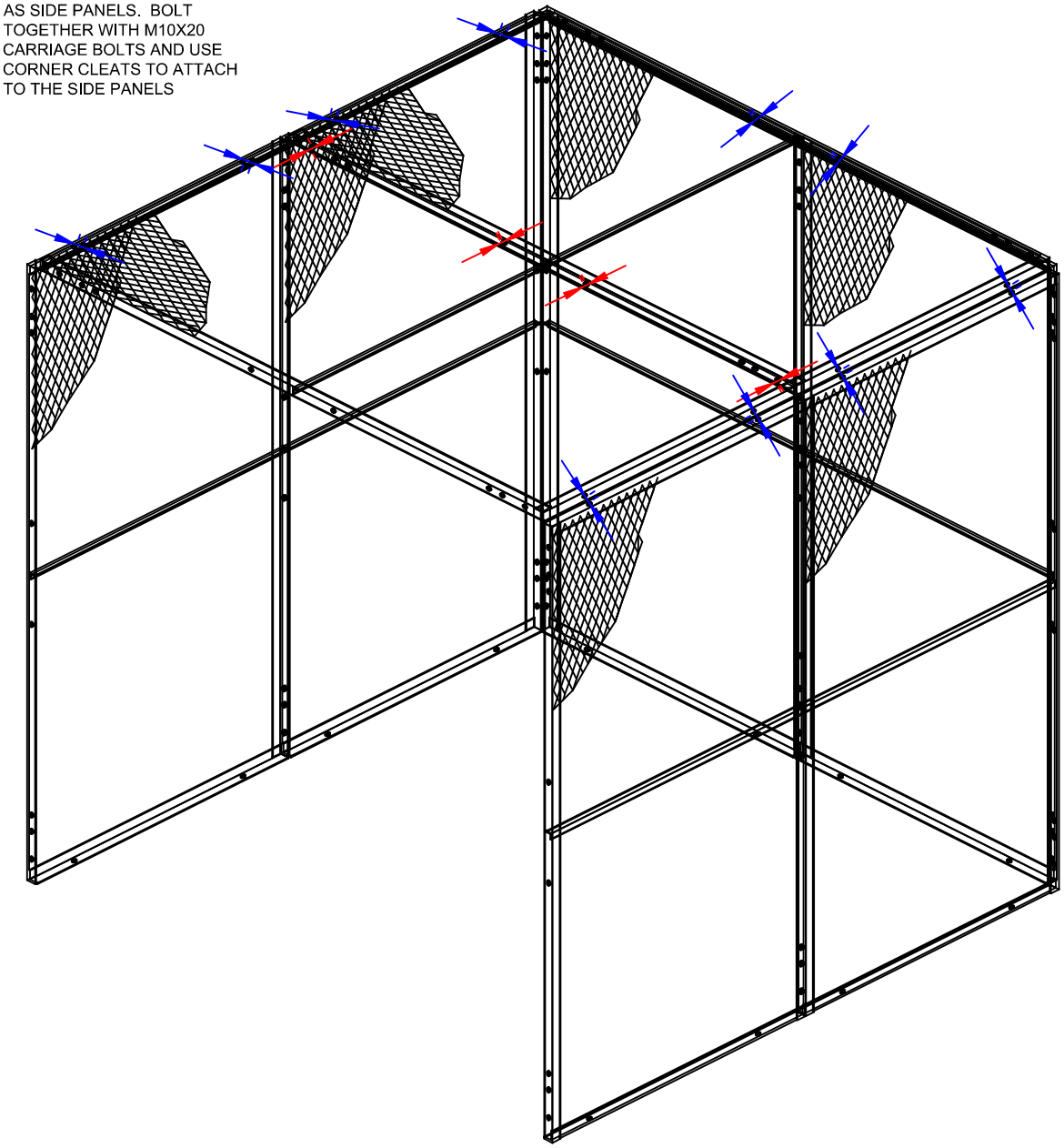

STEP 5

DOORS. ATTACH PADLOCK HASPS USING M10X20 BOLTS. ATTACH DOOR STOPS USING M10X20 COUNTERSUNK BOLTS. ATTACH HINGES USING COUNTERSUNK BOLTS TO DOOR AND M10X20 TO SIDES

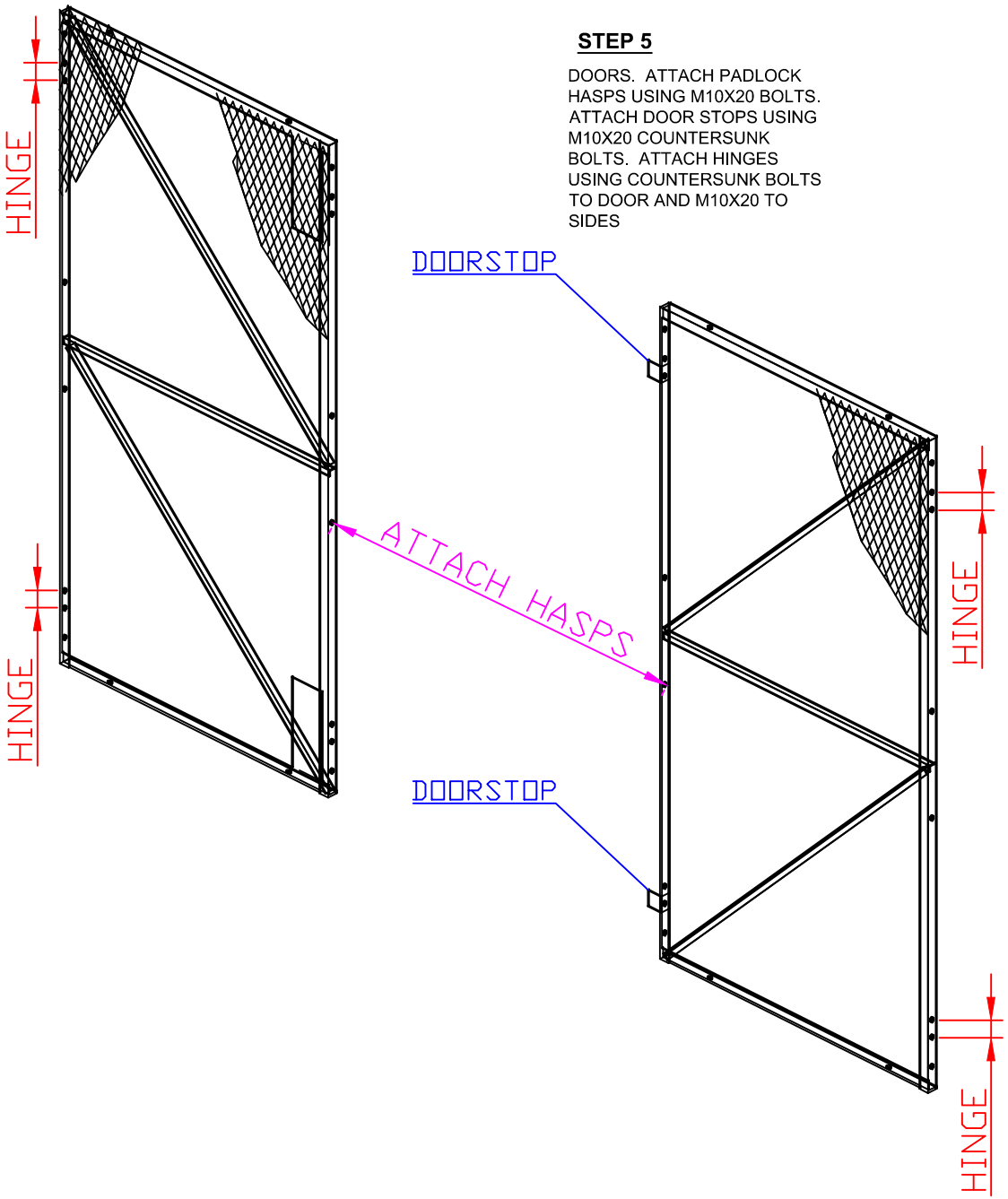
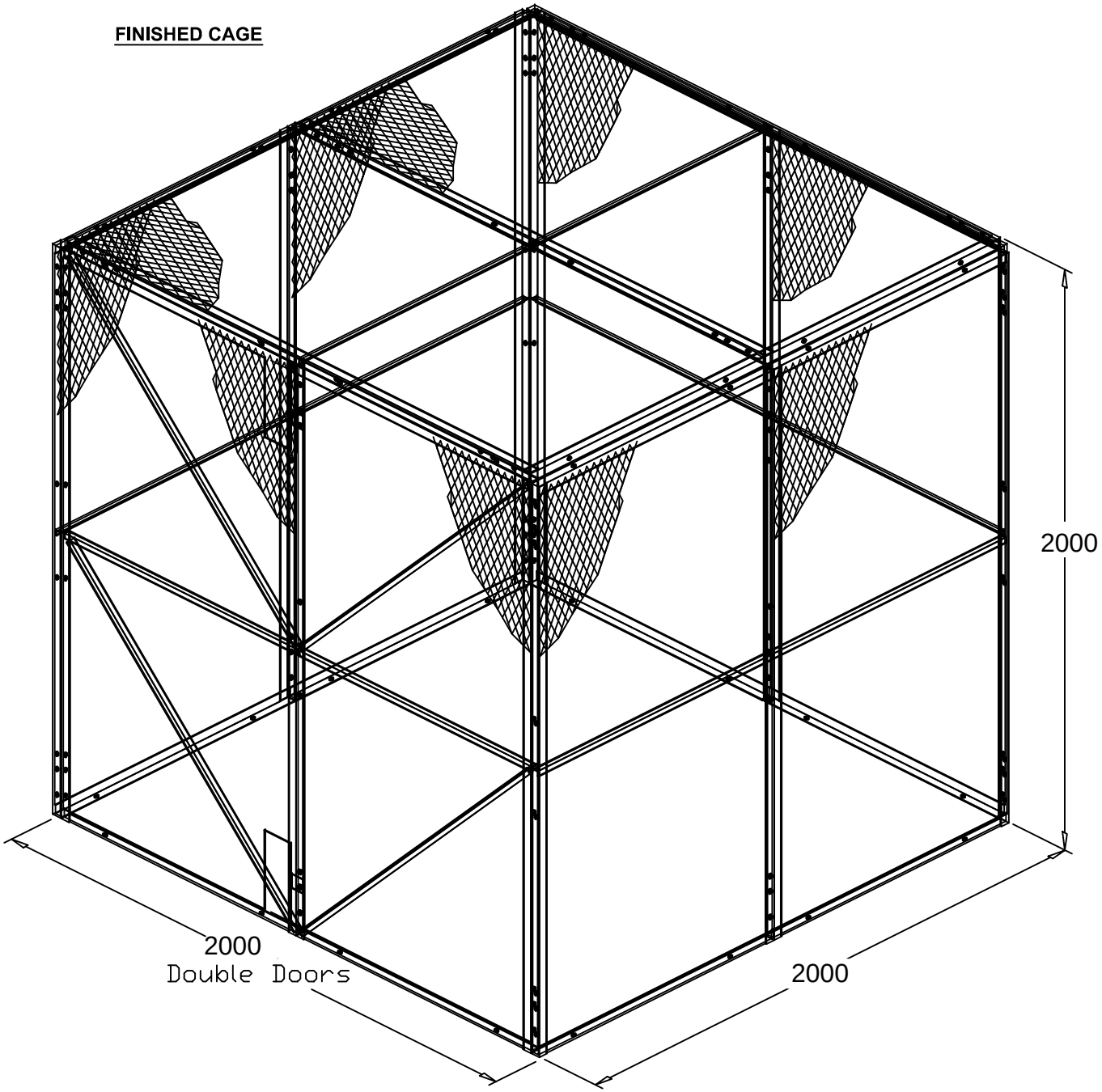
FINISHED CAGE